DRAWING NO.
AL 99000

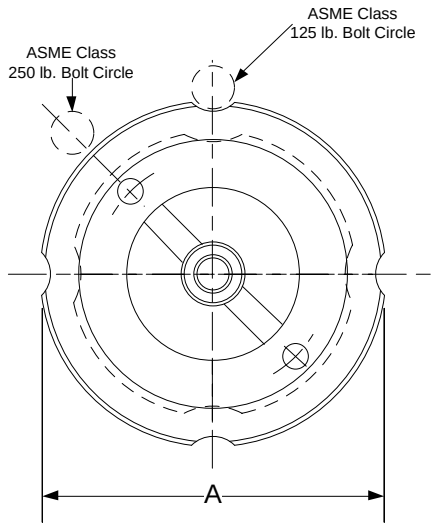

BODY PRESSURE & TEMPERATURE RATINGS – NON SHOCK			
NOM. RATING*	MEDIA	2” to 6”	8” to 12”
125# (WAFER)	W.O.G.	500 PSI @ 150°F	200 PSI @ 150°F

*Sizes 2” – 6” are 125/250 lb dual rated. Sizes 8” – 12” are 125 lb. rated.

PARTS LIST		
ITEM	DESCRIPTION	MATERIAL
1	BODY	CAST IRON (ASTM A 126, CLASS B)
2	SEAT*	BUNA-N O-RING
3	DISC	CAST BRONZE (ASTM B 62, C83600)
4	SPRING	STAINLESS STEEL (ASTM A 182, GRADE F-304)
5	SCREW	STAINLESS STEEL (ASTM A 182, GRADE F-304)
6	BUSHING	STAINLESS STEEL (ASTM A 182, GRADE F-304)

*Other Seat Materials Available in Viton, EPDM, PTFE, and Neoprene.

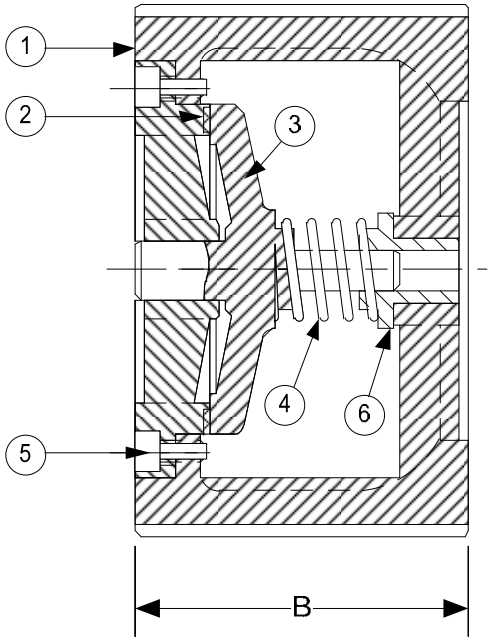

PRODUCT NUMBER†	SIZE	DIMENSIONS			WEIGHT
		A	B	Bolt Diameter	
2CW1F-CI-B2134	2	4-1/4	2-5/8	5/8	5
21/2CW1F-CI-B2134	2-1/2	5	2-7/8	5/8	8
3CW1F-CI-B2134	3	5-3/4	3-1/8	5/8	10
4CW1F-CI-B2134	4	7	4	5/8	18
5CW1F-CI-B2134	5	8-3/8	4-5/8	3/4	29
6CW1F-CI-B2134	6	9-3/4	5-9/16	3/4	42
8CW1F-CI-B2134	8	13-1/2	6-1/2	3/4	85
10CW1F-CI-B2134	10	16	8-1/4	7/8	160
12CW1F-CI-B2134	12	19-1/4	11-1/4	7/8	340

†See *“Style CW Product Number Configuration”* for additional options.

APPLICABLE STANDARDS

• Design ASME B16.1 • Testing API 598	• MSS SP – 6 • MSS SP – 25 • MSS SP – 55

KECKLEY

3400 CLEVELAND SKOKIE ILLINOIS

DRAWING NO.
AL 99000

DIMENSIONAL ASSEMBLY

PART NO.
CW1F-CI-B2134

125# Wafer Center Guided Silent

SCALE: NTS

Check Valve

DATE: 07/01/2011

MAT’L: Cast Iron

REQ. ---

DR. BY DSF