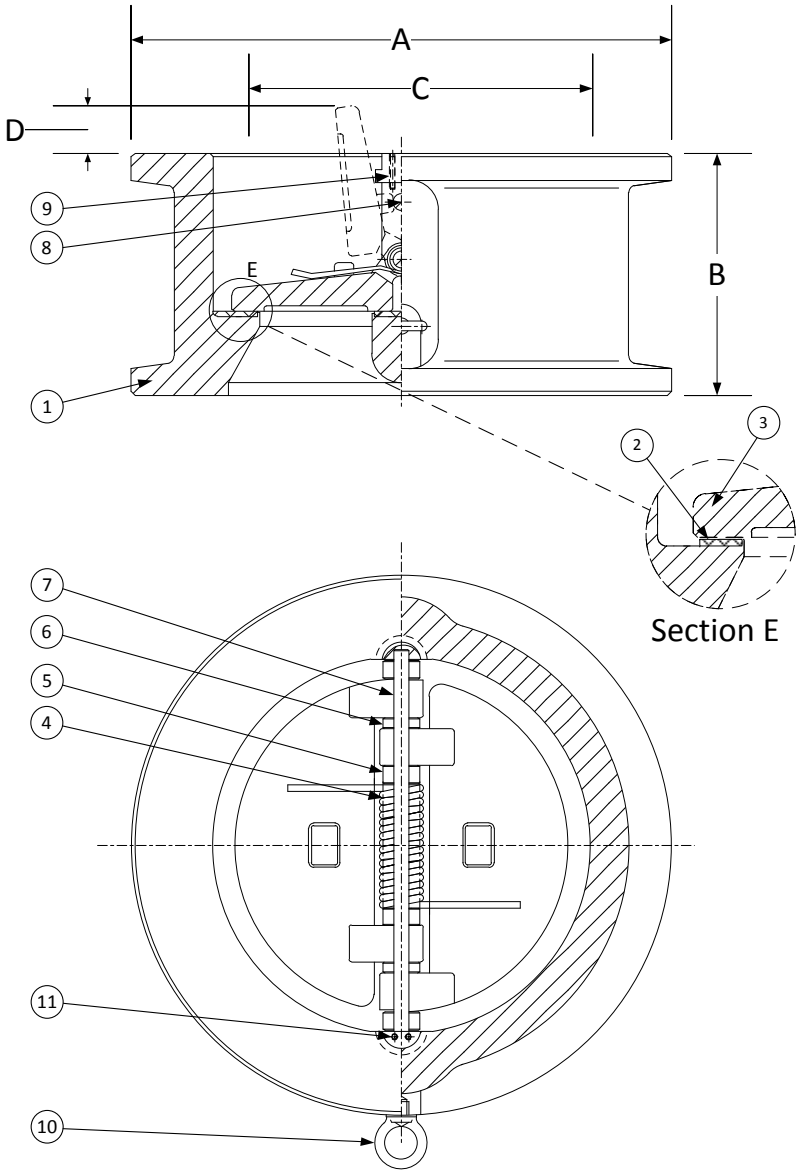

BODY PRESSURE & TEMPERATURE RATINGS – NON SHOCK		
NOM. RATING	MEDIA	2" to 24"
1500# (WAFER)	W.O.G.	3600 PSI @ 100°F

DRAWING NO.
AL 100840

PARTS LIST		
ITEM	DESCRIPTION	MATERIAL
1	BODY	ALLOY 20 (ASTM A 351, GRADE CN7M)
2	SEAT*	VITON O-RING
3	DISC	ALLOY 20 (ASTM A 351, GRADE CN7M)
4	SPRING	INCONEL X-750
5	SPRING PLATE	STAINLESS STEEL (ASTM A 182, GRADE F-316)
6	THRUST WASHER	STAINLESS STEEL (ASTM A 182, GRADE F-316)
7	HINGE PIN	STAINLESS STEEL (ASTM A 182, GRADE F-316)
8	STOP PIN	STAINLESS STEEL (ASTM A 182, GRADE F-316)
9	LOCATING PIECE	STAINLESS STEEL (ASTM A 182, GRADE F-316)
10	LIFTING LUG	CARBON STEEL
11	SCREW	STAINLESS STEEL (316)

*Other Seat Materials Available in Buna-N, EPDM, PTFE, and Neoprene.

PRODUCT NUMBER†	SIZE	DIMENSIONS				WEIGHT
		A	B	C*	D	
2DD7R-A2-A24IX	2	5-5/8	2-3/4	1-11/16	-	14
21/2DD7R-A2-A24IX	2-1/2	6-1/2	3-1/4	2-1/8	1/16	16
3DD7R-A2-A24IX	3	6-7/8	3-1/4	2-5/8	5/16	25
4DD7R-A2-A24IX	4	8-1/4	4	3-7/16	9/16	43
5DD7R-A2-A24IX	5	10	-	4-5/16	-	-
6DD7R-A2-A24IX	6	11-1/8	6-1/4	5-3/16	1-1/16	110
8DD7R-A2-A24IX	8	13-7/8	8-1/8	6-13/16	1-13/32	219
10DD7R-A2-A24IX	10	17-1/8	9-3/4	8-1/2	1-11/16	397
12DD7R-A2-A24IX	12	20-1/2	12	10-1/8	2-1/4	725
14DD7R-A2-A24IX	14	22-3/4	14	11-1/2	2	948
16DD7R-A2-A24IX	16	25-1/4	15-1/8	12-3/16	2-5/8	1380
18DD7R-A2-A24IX	18	27-3/4	18-7/16	13-3/4	2-11/16	1900
20DD7R-A2-A24IX	20	29-3/4	21	14-3/4	4	2750
24DD7R-A2-A24IX	24	35-1/2	22	15-1/8	4-1/8	4409

*Minimum companion flange bore.
†See *"Style DD Product Number Configuration"* for additional options.

APPLICABLE STANDARDS

• Design ASME B16.5, B16.34	• MSS SP – 6
• Conform to API 594 & 6D	• MSS SP – 25
• Testing API 598	• MSS SP – 55

KECKLEY
3400 CLEVELAND SKOKIE ILLINOIS

DRAWING NO.
AL 100840

DIMENSIONAL ASSEMBLY

PART NO.
DD7R-A2-A24IX

1500# Retainerless Wafer Body

SCALE: NTS

Double Disc Check Valve

DATE: 07/01/2011

MAT'L: Cast Alloy 20 | REQ. --- | DR. BY DSF