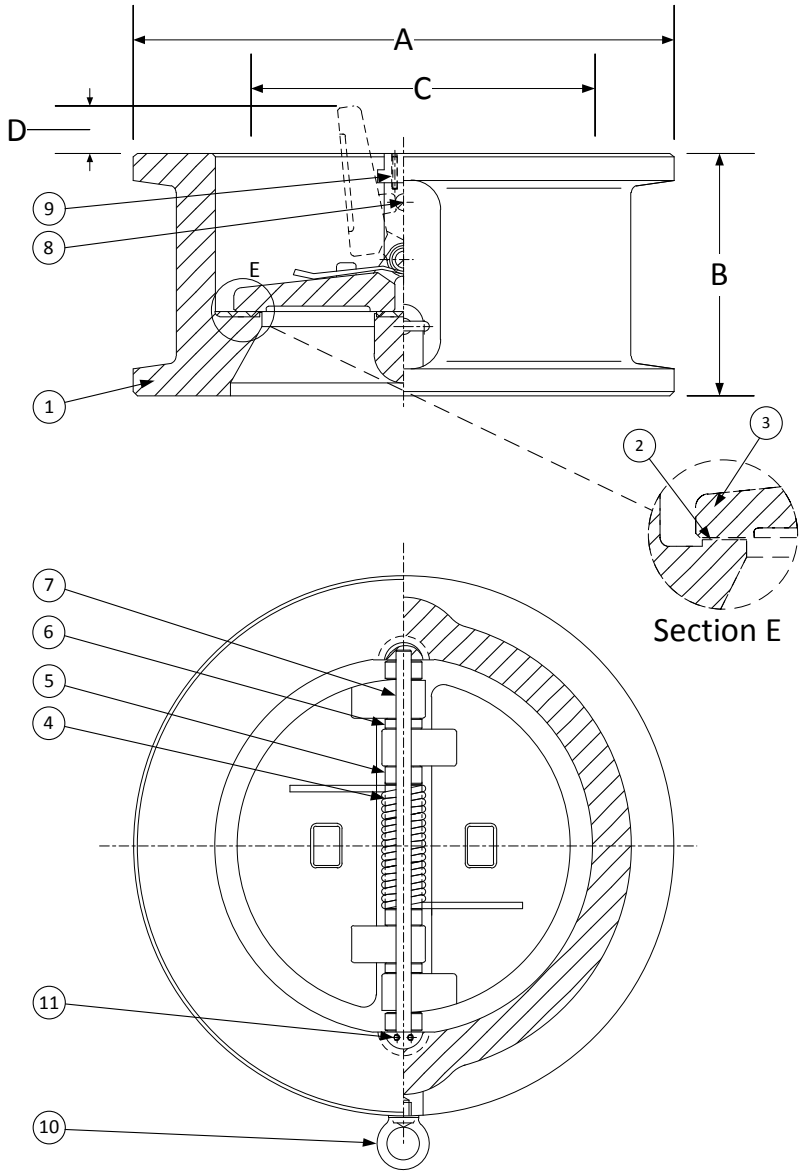

PARTS LIST		
ITEM	DESCRIPTION	MATERIAL
1	BODY	NICKEL ALUMINUM BRONZE (ASTM B 148, C95800)
2	SEAT	NICKEL ALUMINUM BRONZE (ASTM B 148, C95800)
3	DISC	NICKEL ALUMINUM BRONZE (ASTM B 148, C95800)
4	SPRING	INCONEL X-750
5	SPRING PLATE	STAINLESS STEEL (ASTM A 182, GRADE F-316)
6	THRUST WASHER	STAINLESS STEEL (ASTM A 182, GRADE F-316)
7	HINGE PIN	STAINLESS STEEL (ASTM A 182, GRADE F-316)
8	STOP PIN	STAINLESS STEEL (ASTM A 182, GRADE F-316)
9	LOCATING PIECE	STAINLESS STEEL (ASTM A 182, GRADE F-316)
10	LIFTING LUG	CARBON STEEL
11	SCREW	STAINLESS STEEL (316)

*Other Seat Materials Available in Metal (Same as Disc), 316LSS Overlay, and 410SS Overlay.

PRODUCT NUMBER†	SIZE	DIMENSIONS				WEIGHT
		A	B	C*	D	
2DD2F-NA-NA2IX	2	4-1/8	2-3/8	1-15/16	-	6
21/2DD2F-NA-NA2IX	2-1/2	4-7/8	2-5/8	2-11/32	-	10
3DD2F-NA-NA2IX	3	5-3/8	2-7/8	2-29/32	1/4	13
4DD2F-NA-NA2IX	4	6-7/8	2-7/8	3-53/64	5/8	17
5DD2F-NA-NA2IX	5	7-3/4	3-3/8	4-13/16	7/8	27
6DD2F-NA-NA2IX	6	8-3/4	3-7/8	5-49/64	1-3/8	35
8DD2F-NA-NA2IX	8	11	5	7-5/8	2-1/8	70
10DD2F-NA-NA2IX	10	13-3/8	5-3/4	9-9/16	2-3/4	106
12DD2F-NA-NA2IX	12	16-1/8	7-1/8	11-3/8	3-1/4	172
14DD2F-NA-NA2IX	14	17-3/4	7-1/4	12-1/2	3-1/4	200
16DD2F-NA-NA2IX	16	20-1/4	7-1/2	15	4-7/16	275
18DD2F-NA-NA2IX	18	21-5/8	8	16-7/8	5-3/8	315
20DD2F-NA-NA2IX	20	23-7/8	8-5/8	18-13/16	6-5/16	435
24DD2F-NA-NA2IX	24	28-1/4	8-3/4	22-5/8	8-1/4	620
30DD2F-NA-NA2IX	30	34-3/4	13	29-1/4	9	1230
36DD2F-NA-NA2IX	36	41-1/4	15-1/4	35	11-15/16	2017
42DD2F-NA-NA2IX	42	48	17	41	15	2800
48DD2F-NA-NA2IX	48	54-1/2	20-5/8	47	16-3/4	3920

*Minimum companion flange bore. Sizes 30" and larger fit Series A flanges.

†See *"Style DD Product Number Configuration"* for additional options.

DRAWING NO.
AL 101040

BODY PRESSURE & TEMPERATURE RATINGS – NON SHOCK		
NOM. RATING	MEDIA	2" to 48"
150# (WAFER)	W.O.G.	225 PSI @ 150°F

APPLICABLE STANDARDS

• Design ASME B16.24	• MSS SP – 6
• Conform to API 594 & 6D	• MSS SP – 25
• Testing API 598	• MSS SP – 55

KECKLEY

3400 CLEVELAND SKOKIE ILLINOIS

DRAWING NO.
AL 101040

DIMENSIONAL ASSEMBLY

PART NO.
DD2F-NA-NA2IX

150# Retainerless Wafer Body

SCALE: NTS

Double Disc Check Valve

DATE: 07/01/2011

MAT'L: Cast Nickel Aluminum Bronze | REQ. --- | DR. BY DSF