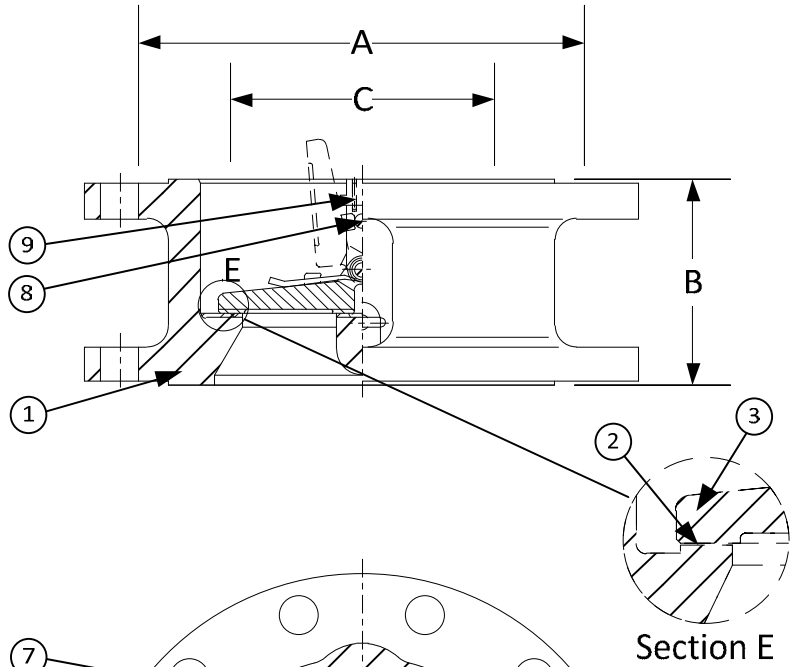

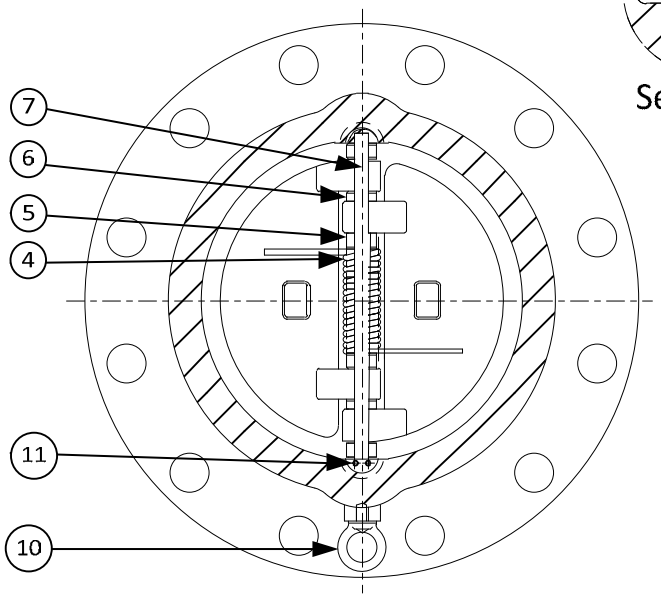

Section E

BODY PRESSURE & TEMPERATURE RATINGS – NON SHOCK		
NOM. RATING	MEDIA	8" to 48"
300# (WAFER DOUBLE FLANGE)	W.O.G.	720 PSI @ 100°F

DRAWING NO.
AL 105340

PARTS LIST		
ITEM	DESCRIPTION	MATERIAL
1	BODY	DUPLEX (ASTM A 351, GRADE CD4MCu)
2	SEAT*	DUPLEX (ASTM A 351, GRADE CD4MCu)
3	DISC	DUPLEX (ASTM A 351, GRADE CD4MCu)
4	SPRING	INCONEL X-750
5	SPRING PLATE	STAINLESS STEEL (ASTM A 182, GRADE F-316)
6	THRUST WASHER	STAINLESS STEEL (ASTM A 182, GRADE F-316)
7	HINGE PIN	STAINLESS STEEL (ASTM A 182, GRADE F-316)
8	STOP PIN	STAINLESS STEEL (ASTM A 182, GRADE F-316)
9	LOCATING PIECE	STAINLESS STEEL (ASTM A 182, GRADE F-316)
10	LIFTING LUG	CARBON STEEL
11	SCREW	STAINLESS STEEL (316)

*Other Seat Materials Available in Metal (Same as Disc), 316LSS Overlay, and 410SS Overlay.

PRODUCT NUMBER†	SIZE	DIMENSIONS			WEIGHT
		A	B	C*	
8DF4R-DP-DP2IX	8	12-1/8	5	7-1/2	151
10DF4R-DP-DP2IX	10	14-1/4	5-3/4	9-7/16	251
12DF4R-DP-DP2IX	12	20-1/2	7-1/8	11-3/8	465
14DF4R-DP-DP2IX	14	23	8-3/4	12-1/2	593
16DF4R-DP-DP2IX	16	25-1/2	9-1/8	14-3/8	771
18DF4R-DP-DP2IX	18	28	10-3/8	16-1/8	970
20DF4R-DP-DP2IX	20	30-1/2	11-1/2	17-7/8	1078
24DF4R-DP-DP2IX	24	36	12-1/2	22-1/8	1516
30DF4R-DP-DP2IX	30	43	14-1/2	28-3/4	3100
36DF4R-DP-DP2IX	36	50	19	35	4650
42DF4R-DP-DP2IX	42	50-3/4	22-3/8	41	8670
48DF4R-DP-DP2IX	48	57-3/4	24-3/4	47	9950

*Minimum companion flange bore. Sizes 30" and larger fit **Series A** flanges.
Available with thru-hole bolting or threaded bolt holes
†See *"Style DF Product Number Configuration"* for additional options.

APPLICABLE STANDARDS

• Design ASME B16.5, B16.34	• MSS SP – 6
• Conform to API 594 & 6D	• MSS SP – 25
• Testing API 598	• MSS SP – 55

KECKLEY
3400 CLEVELAND SKOKIE ILLINOIS

DRAWING NO.
AL 105340

DIMENSIONAL ASSEMBLY

PART NO.
DF4R-DP-DP2IX

300# Retainerless Wafer Double Flange Body

SCALE: NTS

Double Disc Check Valve

DATE: 07/01/2011

MAT'L: Cast Duplex | REQ. --- | DR. BY DSF