DRAWING NO.
AL

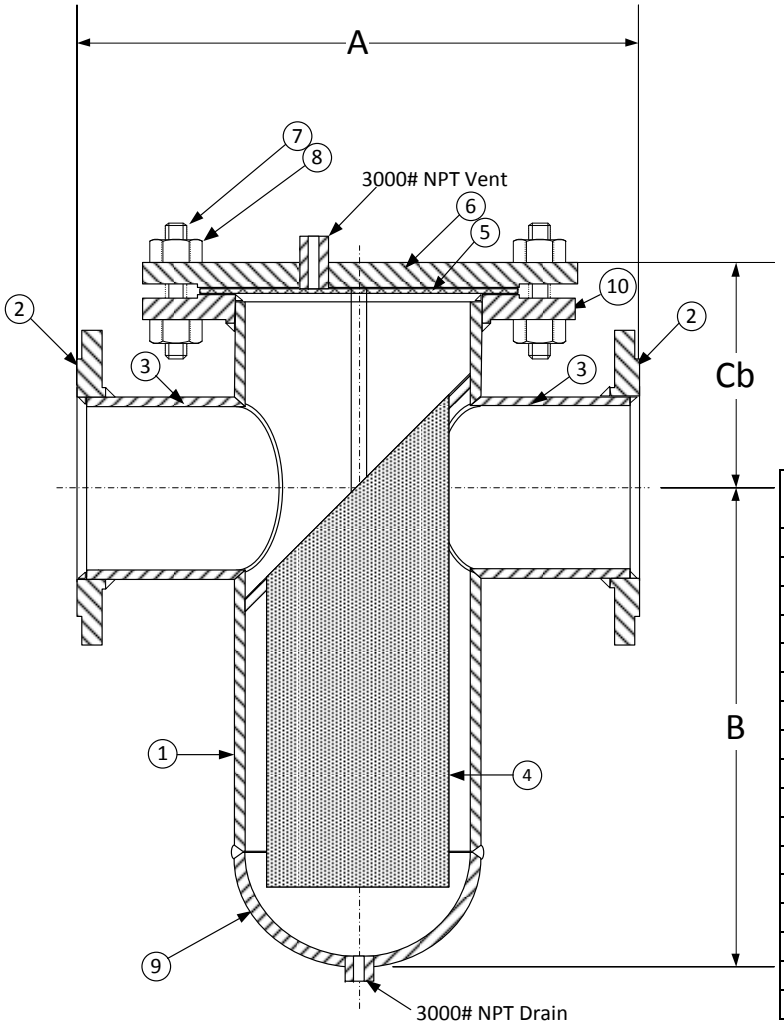

PARTS LIST

Item	Description	Material
1	BODY	COPPER NICKEL 90/10
2*	300LB RFSO Flange	COPPER NICKEL 90/10
3	NOZZLE	COPPER NICKEL 90/10
4	BASKET	STAINLESS STEEL (304) – 1/8" PERFORATION
5	GASKET	FIBER
6	300LB BLIND FLANGE (COVER)	COPPER NICKEL 90/10
7	STUDS	CARBON STEEL (ASTM A193, GRADE B7)
8	NUTS	CARBON STEEL (ASTM A 194, GRADE 2H)
9	WELD CAP	COPPER NICKEL 90/10
10*	300LB RFSO Flange	COPPER NICKEL 90/10

*30" & Larger Flanges are RFWN Series B.

Product Numbers†	DIMENSIONS (in)						Body (Housing)	WEIGHT (lbs)	
	SIZE	A	B	Cb	Vent	Drain		Cover	Total
14RFFB-FCU125P34-FBB	1	11	7	6-1/2	1/4	1/2	3	4	46
11/24RFFB-FCU125P34-FBB	1-1/2"	12	8	7-1/2	1/4	1/2	4	7	77
24RFFB-FCU125P34-FBB	2"	13	8	8-1/2	1/4	1/2	4	8	80
21/24RFFB-FCU125P34-FBB	2-1/2"	15	13	12	1/4	1/2	5	12	116
34RFFB-FCU125P34-FBB	3"	15	13	12	1/4	1/2	6	16	163
44RFFB-FCU125P34-FBB	4"	17	14	12-1/2	1/2	1	8	28	289
54RFFB-FCU125P34-FBB	5"	17	15	13	1/2	1	8	37	310
64RFFB-FCU125P34-FBB	6"	21	17	13	1/2	1	10	50	421
84RFFB-FCU125P34-FBB	8"	23	21	14	1/2	1-1/2	12	81	591
104RFFB-FCU125P34-FBB	10"	33	25	15	1/2	1-1/2	16	124	962
124RFFB-FCU125P34-FBB	12"	36	28	17	1/2	1-1/2	18	185	1283
144RFFB-FCU125P34-FBB	14"	38	33	18-1/2	1/2	2	20	250	1590
164RFFB-FCU125P34-FBB	16"	43	36	19-1/2	1/2	2	24	315	2321
184RFFB-FCU125P34-FBB	18"	43	39	20	1/2	2	24	415	2487
204RFFB-FCU125P34-FBB	20"	44	44	22	1/2	2	30	515	3695
244RFFB-FCU125P34-FBB	24"	49	44	23	1/2	2	30	800	4075
304RFFB-FCU125P34-FBB	30"	63	54	58	1/2	2	36	1249	6100

†See *"Style FB Product Number Configuration"* for additional options.

BODY PRESSURE & TEMPERATURE RATINGS – NON SHOCK	
NOM. RATING	1" to 30"
300# RFSO	

KECKLEY
3400 CLEVELAND SKOKIE ILLINOIS

DRAWING NO.

DIMENSIONAL ASSEMBLY

PART NO.

300Lb. Flg. Style FB, Fabricated 90/10 Copper Nickel Basket Strainer, Bolted Cover

SCALE: NTS

DATE: 07/01/2011

MAT'L: Fabricated Copper Nickel 90/10 REQ. ---

DR. BY DSF