DESIGN	2” to 24”
	150 PSI COLD WORKING PRESSURE

PARTS LIST

ITEM	DESCRIPTION	MATERIAL
1	Body	Carbon Steel (ASTM A 216, Grade WCB)
2	Inner Hex Head Screws (2)	Alloy Steel (ASTM A 193, Grade B7)
3	Gate	Stainless Steel (ASTM A 276, Grade F-304)
4	Valve Seat	Carbon Steel (ASTM A 216, Grade WCB)
4a	Valve Seat Surface	Carbon Steel (ASTM A 216, Grade WCB)
5	Packing	PTFE
6,18,21	Nut	Alloy Steel (ASTM A 194, Grade 2H)
7	Stud	Alloy Steel (ASTM A 193, Grade B7)
8	Clamp Plate	Carbon Steel (ASTM A 216, Grade WCB)
9	Stem	Stainless Steel (ASTM A 276, Grade F-410)
10	Grease Fitting	Stainless Steel (ASTM A 276, Grade F-304)
11	Handwheel Nut	Carbon Steel (AISI 1025)
12	Handwheel	Ductile Iron (ASTM A 536)
13	Screw	Alloy Steel (ASTM A 193, Grade B7)
14	Stem Nut	Bronze Alloy (ASTM B 148)
15	Gland	Carbon Steel (ASTM A 216, Grade WCB)
16	Top Yoke	Carbon Steel (ASTM A 216, Grade WCB)
17	Spring Washer	Carbon Steel (AISI 1065)
19	Post (Chrome Plated)	Carbon Steel (AISI 1035)
20	Bolt	Alloy Steel (ASTM A 193, Grade B7)
22	Straight Pin	Carbon Steel (AISI 1035)
23	Cotter Pin	Stainless Steel (ASTM A 276, Grade F-304)
24	Packing Gland	Carbon Steel (ASTM A 216, Grade WCB)
25	O-Ring*	(See Below)

*O-Ring Options: Buna-N, Viton, EPDM, and PTFE.

PRODUCT NUMBER	SIZE	DIMENSIONS (in)							WEIGHT (lbs)
		A	B	C	D	E	F	G	
22KGV-CS-MUM	2	1.88	10.83	1.81	3.62	4.75	0.50	8.00	20
21/22KGV-CS-MUM	2-1/2	2.00	11.81	2.36	4.13	5.50	0.50	8.00	23
32KGV-CS-MUM	3	2.00	12.52	2.76	5.00	6.00	0.50	8.00	27
42KGV-CS-MUM	4	2.00	14.80	3.78	6.20	7.50	0.50	8.00	35
52KGV-CS-MUM	5	2.25	18.11	4.72	7.28	8.50	0.63	10.00	47
62KGV-CS-MUM	6	2.25	19.29	5.71	8.50	9.50	0.63	10.00	57
82KGV-CS-MUM	8	2.75	22.83	7.64	10.63	11.75	0.63	12.00	86
102KGV-CS-MUM	10	2.75	28.15	9.65	12.76	14.25	0.75	14.00	141
122KGV-CS-MUM	12	3.00	33.27	11.81	15.00	17.00	0.75	14.00	187
142KGV-CS-MUM	14	3.00	37.36	12.99	16.26	18.75	0.81	16.00	265
162KGV-CS-MUB	16*	3.50	42.60	14.96	18.50	21.25	0.88	16.00	381
182KGV-CS-MUB	18*	3.50	45.39	16.54	21.00	22.75	0.94	20.00	474
202KGV-CS-MUB	20*	4.50	50.94	18.50	23.00	25.00	1.00	22.00	637
242KGV-CS-MUB	24*	4.50	56.69	22.44	27.26	29.50	1.00	23.62	884

*16” – 24” standard with Bevel Gear. (Not Shown).

DRAWING NO.
AL 110000

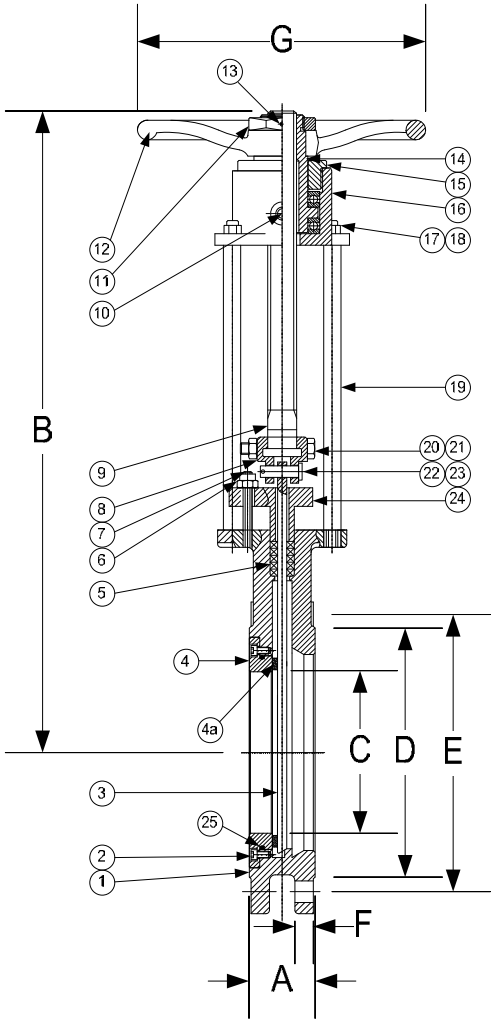

KECKLEY

3400 CLEVELAND SKOKIE ILLINOIS

DRAWING NO.
AL 110000

DIMENSIONAL ASSEMBLY

PART NO.
2KGV-CS-MUM

150# Flg. Style KGV Manual Operated

SCALE: NTS

Uni-Directional Knife Gate Valve

DATE: 05/13/2013

MAT’L: Cast Carbon Steel

REQ. ---

DR. BY DSF