DRAWING NO.
AL 91330C9

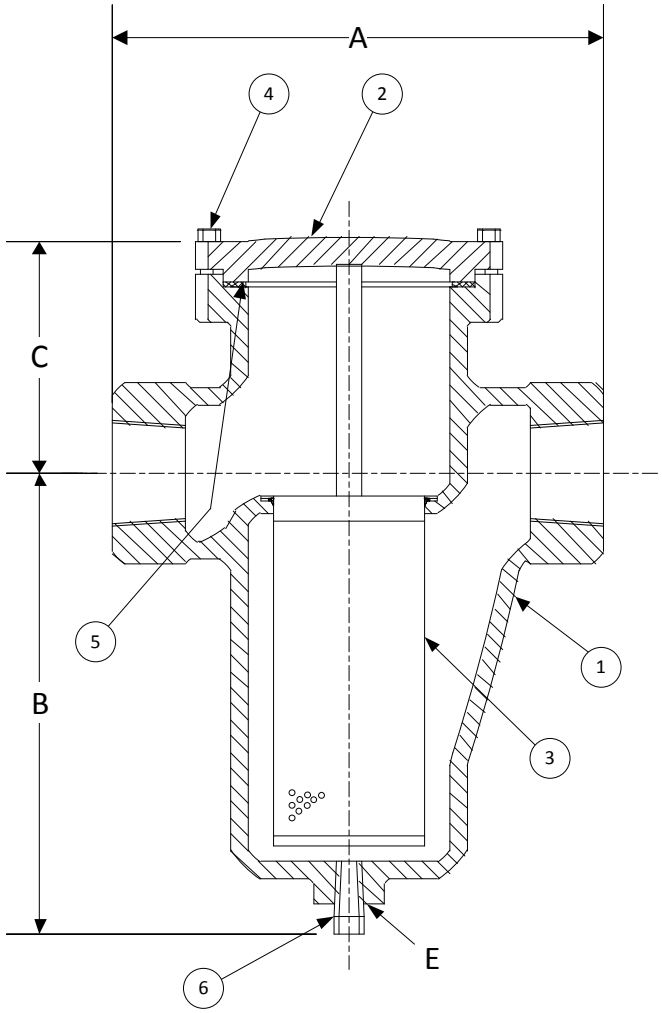

BODY PRESSURE & TEMPERATURE RATINGS – NON SHOCK		
NOM. RATING	MEDIA	3/8" to 3"
300# (THREADED)	STEAM	300 PSI @ 1125°F
	W.O.G.	720 PSI @ 100°F

PARTS LIST		
ITEM	DESCRIPTION	MATERIAL
1	BODY	CAST CHROME-MOLY (ASTM A 217, GRADE WC9)
2	COVER	CAST CHROME-MOLY (ASTM A 217, GRADE WC9)
3	BASKET	STAINLESS STEEL (304)
4	HEX HEAD CAP SCREW	STAINLESS STEEL
5	GASKET	SPIRAL WOUND STAINLESS STEEL (304) – GRAPHITE FILLED
6	PLUG	STAINLESS STEEL (316)

Product Number†	SIZE	DIMENSIONS				COVER		WEIGHT
		A	B	C	E	No. of Bolts	Size of Bolts	
3/84THS-C9062P34-GB	3/8	4-9/16	4	3-1/8	3/8	4	3/8-16 x 1-3/8	6
1/24THS-C9062P34-GB	1/2	4-9/16	4	3-1/8	3/8	4	3/8-16 x 1-3/8	6
3/44THS-C9062P34-GB	3/4	4-9/16	4	3-1/8	3/8	4	3/8-16 x 1-3/8	6
14THS-C9062P34-GB	1	5-5/16	4-7/8	3	3/8	4	3/8-16 x 1-3/8	9
11/44THS-C9062P34-GB	1-1/4	6-5/16	6-1/2	4-1/8	1/2	4	3/8-16 x 1-1/2	14
11/24THS-C9062P34-GB	1-1/2	6-5/16	6-1/2	4-1/8	1/2	4	3/8-16 x 1-1/2	14
24THS-C9062P34-GB	2	8-1/4	7-7/8	4-3/4	3/4	4	1/2-13 x 1-5/8	27
21/24THS-C9062P34-GB	2-1/2	9-5/8	8-3/4	4	1	4	1/2-13 x 1-3/4	34
34THS-C9062P34-GB	3	11-1/4	11-3/8	5-7/8	1	4	5/8-11 x 2	60

†See *"Style SD Product Number Configuration"* for additional options.

STANDARD SCREENS SUPPLIED

SIZE	SCREEN GAGE	SCREEN PERFORATION			
		FOR STEAM	OPEN AREA	FOR LIQUID	OPEN AREA
in		in		in	
3/8 to 2	28	1/32	29%	1/16	30%
2-1/2 to 3	26	3/64	33%	1/16	30%

Standard screens supplied are for **liquid service**, unless otherwise specified.
Options: Other meshes, perforations, and screen materials are available.

KECKLEY
3400 CLEVELAND SKOKIE ILLINOIS

DRAWING NO.
AL 91330C9

DIMENSIONAL ASSEMBLY

PART NO.

300# Threaded Style SD-C9

SCALE: NTS

Basket Strainer w/ 304 ss screen

DATE: 07/01/2011

MAT'L: Cast Chrome-Moly WC9

REQ. ---

DR. BY DSF