DRAWING NO.
AL 109560

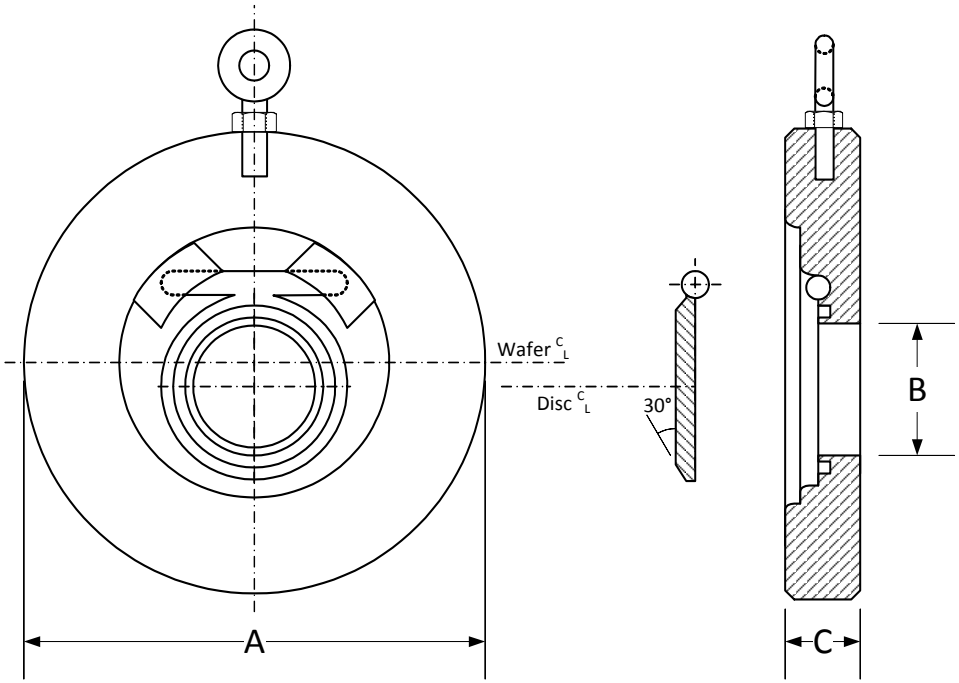

PARTS LIST		
ITEM	DESCRIPTION	MATERIAL
1	BODY	HASTELLOY C276
2	DISC	HASTELLOY C276
3	HINGE PIN	STAINLESS STEEL (302)
4	PIN RETAINER	STAINLESS STEEL (302)
5	O-RING	VITON
6	EYE BOLT W/ HEX NUT	CARBON STEEL (ASTM A 105)

Product Numbers†	SIZE	DIMENSIONS (in)			WEIGHTS (lbs)
		A	B	C	
2SP6R-HC-HC4	2	5-5/8	1	3/4	4
21/2SP6R-HC-HC4	2-1/2	6-1/2	1-3/8	3/4	6
3SP6R-HC-HC4	3	6-5/8	1-3/4	3/4	7
4SP6R-HC-HC4	4	8-1/8	2-5/8	7/8	12
6SP6R-HC-HC4	6	11-3/8	4	1-3/8	24
8SP6R-HC-HC4	8	14-1/8	5	1-3/4	57
10SP6R-HC-HC4	10	17-1/8	6-7/8	2-1/4	131
12SP6R-HC-HC4	12	19-5/8	8-1/2	2-3/8	234
14SP6R-HC-HC4	14	20-1/2	9-1/2	2-3/4	TBA
16SP6R-HC-HC4	16	22-5/8	11	3-1/4	TBA
18SP6R-HC-HC4	18	25-1/8	12-1/2	3-3/4	TBA
20SP6R-HC-HC4	20	27-1/2	14-1/4	4-1/4	TBA
24SP6R-HC-HC4	24	33	17-3/8	5-1/4	TBA
26SP6R-HC-HC4	26	34-3/4	19	5-3/4	TBA
30SP6R-HC-HC4	30	39-3/4	22	6-3/4	TBA
36SP6R-HC-HC4	36	47-1/4	26-1/2	8	TBA

†See *"Style SP Product Number Configuration"* for additional options.

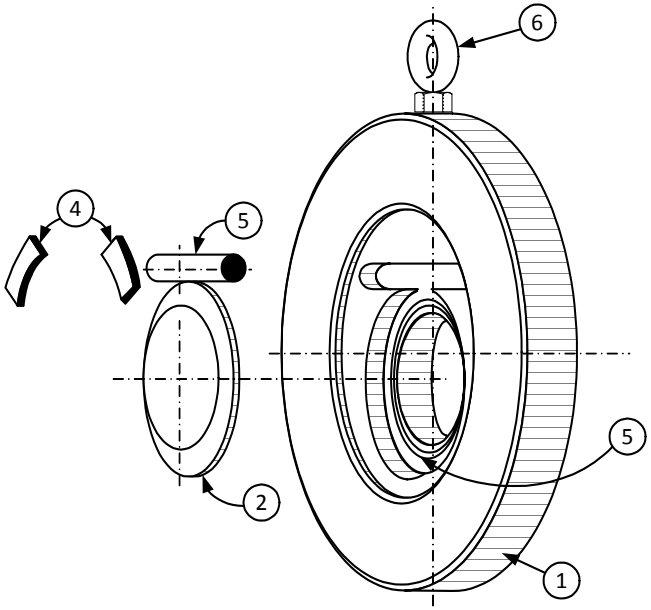

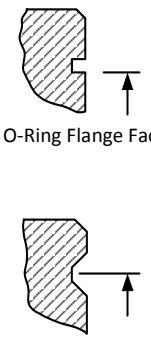

Flange Face Alternatives

KECKLEY
3400 CLEVELAND SKOKIE ILLINOIS

DRAWING NO.
AL 109560

DIMENSIONAL ASSEMBLY

PART NO.
SP6R-HC-HC4

900lb. Short Pattern Wafer Check Valve

SCALE: NTS

Reduced Port

DATE: 10/01/2011

MAT'L: Hastelloy C276 | REQ. --- | DR. BY DSF