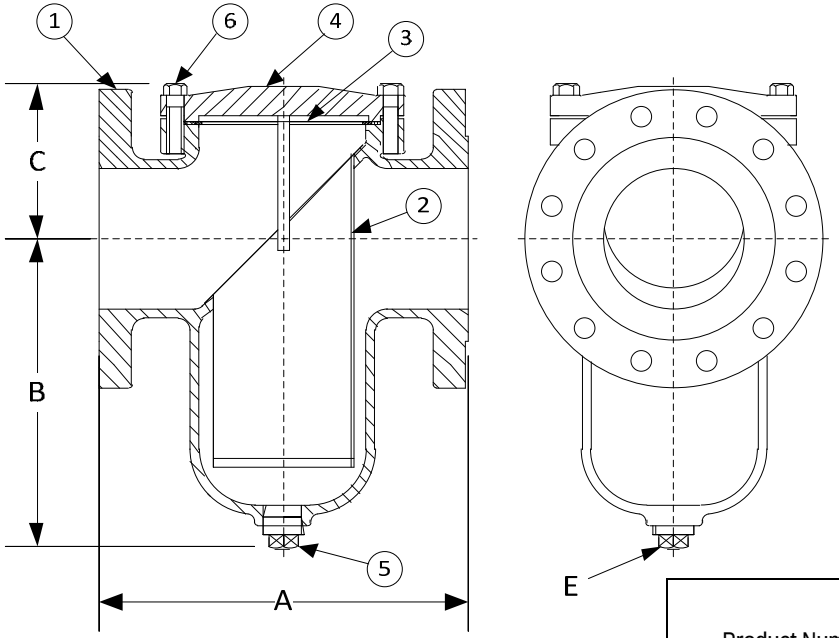

DRAWING NO.
AL 91420A2

BODY PRESSURE & TEMPERATURE RATINGS – NON SHOCK		
NOM. RATING	MEDIA	1-1/2" to 14"
300# (EX. HEAVY FLANGE)	STEAM	300 PSI @ 1125°F
	W.O.G.	720 PSI @ 100°F

PARTS LIST		
ITEM	DESCRIPTION	MATERIAL
1	BODY	CAST ALLOY 20 (ASTM A 351, GRADE CN7M)
2	BASKET	STAINLESS STEEL (304)
3	GASKET	SPIRAL WOUND STAINLESS STEEL (304) – GRAPHITE FILLED
4	COVER	CAST ALLOY 20 (ASTM A 351, GRADE CN7M)
5	PIPE PLUG	STAINLESS STEEL (316)
6	HEX HEAD CAP SCREW	STAINLESS STEEL (316)

Product Number†	SIZE	DIMENSIONS (in)				COVER		WEIGHT (lbs)
		A	B	C	E	No. of Bolts	Size of Bolts	
11/24RFS-A2062P34-GB	1-1/2	7	4	3-3/4	1/2	4	5/8-11 x 1-1/2	24
24RFS-A2062P34-GB	2	8-13/16	4-3/4	3-3/4	1	6	1/2-13 x 1-3/4	32
21/24RFS-A2062P34-GB	2-1/2	9	5-5/8	4-5/8	1	4	3/4-10 x 2	42
34RFS-A2062P34-GB	3	10-1/16	5-11/16	5-5/8	3/4	4	3/4-10 x 2-1/4	56
44RFS-A2125P34-GB	4	12	8-1/4	6-1/16	1	4	7/8-9 x 2-1/4	88
54RFS-A2125P34-GB	5	13-1/8	10-1/4	5-5/8	1			126
64RFS-A2125P34-GB	6	15-9/16	12-13/64	6-5/16	1-1/4	8	5/8-11 x 2-1/4	150
84RFS-A2125P34-GB	8	18-7/8	15-9/16	8-3/16	1-1/2	10	5/8-11 x 3	295
104RFS-A2125P34-GB	10	21-5/16	14-3/8	9-7/8	2	16	5/8-11 x 2-3/4	420
124RFS-A2125P34-GB	12	25-3/8	23-3/4	12-3/8	2	16	5/8-11 x 3	500
144RFS-A2125P34-GB	14	34-5/16	34-3/8	20-3/16	2	20	7/8-9 x 4-1/2	1650

†See *"Style SSGFV Product Number Configuration"* for additional options.

STANDARD SCREENS SUPPLIED

SIZE	SCREEN GAGE	SCREEN PERFORATION			
		FOR STEAM	OPEN AREA	FOR LIQUID	OPEN AREA
in		in		in	
1-1/2 to 3	22	3/64	33%	1/16	30%
4 to 14	22	1/16	30%	1/8	43%

Standard screens supplied are for **liquid service**, unless otherwise specified.
Options: Other meshes, perforations, and screen materials are available.

KECKLEY
3400 CLEVELAND SKOKIE ILLINOIS

DRAWING NO.
AL 91420A2

DIMENSIONAL ASSEMBLY

PART NO.

300# Flange Style SSGFV-A2

SCALE: NTS

Basket Strainer w/ 304 ss screen

DATE: 07/01/2011

MAT'L: Cast Alloy 20

REQ. ---

DR. BY DSF