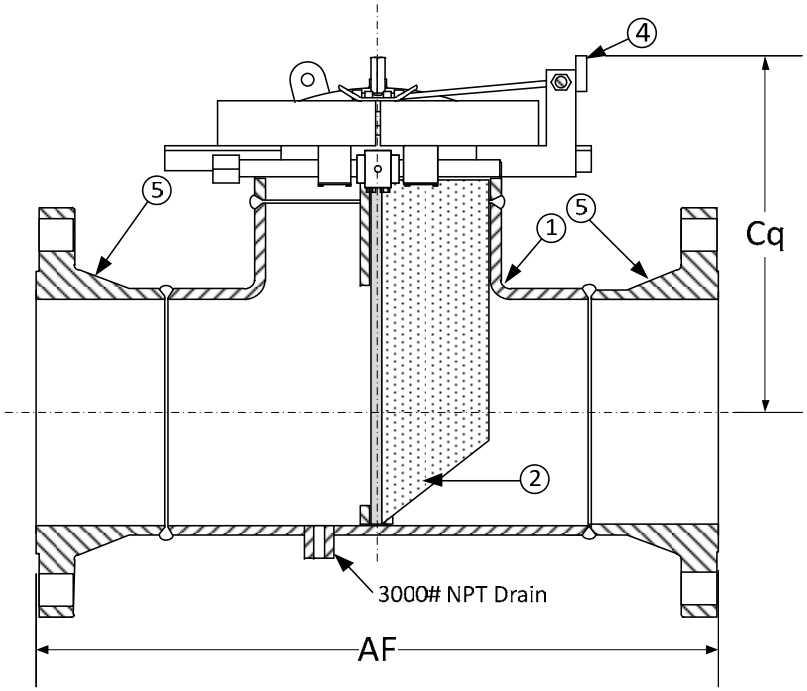

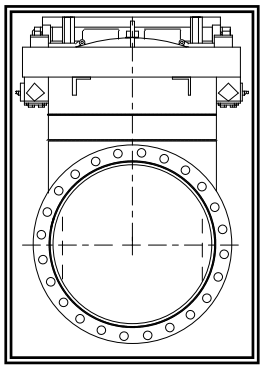

DRAWING NO.
AL 89000

BODY PRESSURE & TEMPERATURE RATINGS – NON SHOCK	
NOM. RATING	8" to 24"
600# RFWN	1440 PSI @ 100°F

PARTS LIST		
ITEM	DESCRIPTION	MATERIAL
1	BODY	STAINLESS STEEL (ASTM A 403, CLASS WP-304)
2	BASKET	STAINLESS STEEL (304) – 1/8" PERFORATION
3*	O-RING	VITON
4	600LB DOUBLE BOLT COVER	STAINLESS STEEL (ASTM A 240, GRADE 304)
5	600LB WELD NECK FLANGES	STAINLESS STEEL (ASTM A 182, GRADE F-304) B 16.5

*Viton o-ring good for temperatures up to 400°F. For higher temperatures up to 450°F, consult factory.

Product Numbers†	DIMENSIONS (in)					WEIGHT (lbs)	
	SIZE	AF	Cq	Vent	Drain	Cover	Total
85RFFT-F34125P34-VOQB	8"	25	15-3/4	1/2	1-1/2	90	407
105RFFT-F34125P34-VOQB	10"	30	18	1/2	1-1/2	160	660
125RFFT-F34125P34-VOQB	12"	32-3/4	21	1/2	1-1/2	190	817
145RFFT-F34125P34-VOQB	14"	35-1/2	22-5/16	1/2	2	230	1221
165RFFT-F34125P34-VOQB	16"	38-1/2	25-1/16	1/2	2	360	1677
185RFFT-F34125P34-VOQB	18"	42	26-15/16	1/2	2	500	2052
205RFFT-F34125P34-VOQB	20"	45-1/2	33-11/16	1/2	2	840	2773
245RFFT-F34125P34-VOQB	24"	50-1/2	37-5/8	1/2	2	930	3666

†See *"Style T Product Number Configuration"* for additional options.

KECKLEY

3400 CLEVELAND SKOKIE ILLINOIS

DRAWING NO.
AL 89000

DIMENSIONAL ASSEMBLY

PART NO.

600lb. Flg, Style T,

SCALE: NTS

Fabricated 304ss Tee Strainer

DATE: 07/01/2011

MAT'L: Fabricated 304ss

REQ. ---

DR. BY DSF